RN.2 Technologies

Datasheet

CMX25Q25

Rev. 1.1

Copyright © 2022 RN2 Technologies Co., Ltd. All Rights Reserved.

Contents

1. KEY FEATURES **3**
2. APPLICATIONS **3**
3. GENERAL DESCRIPTIONS **3**
4. ELECTRICAL SPECIFICATIONS **3**
5. PORT CONFIGURATIONS **4**
6. OUT DIMENSION **4**
7. POWER DERATING CURVE **5**
8. RF Characteristics: Return Loss (at -55 ºC, 25 ºC, and 125 ºC) **6**
9. RF Characteristics: Coupling and Transmission, Directivity, and Insertion Loss (at -55 ºC, 25 ºC, and 125 ºC) **7**
10. RF TEST METHODS **8**
10.1 RF TEST PROCEDURES 8
10.2 RN2 Technologies TEST BOARD LAYOUT 11
10.3 AUTOMATIC PORT EXTENSIONS (APE) FUNCTION 11
11. RECOMMENDED PCB LAND PATTERN **12**
12. SOLDERING PROCESS **13**
13. REFLOW PROFILE **14**
14. PACKAGING AND ORDERING INFORMATION **15**
15. HANDLING GUIDE **16**
16. LEGAL INFORMATION **17**

RN.2 Technologies

The information in this document is the exclusive property of RN2 Technologies and shall be kept confidential. Do not disclose, reproduce, or distribute this information without prior written permission of RN2 Technologies.

25dB Directional Coupler
with High-Power Capacity and Stable Performance based on RN2 Technologies LTCC Multilayer Technology

1. KEY FEATURES

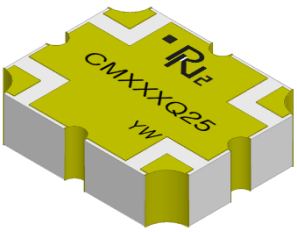

- Frequency range 2300 – 2700 MHz
- Excellent high-power capacity up to average 200 watts
- Excellent stable performance at different temperatures
- Low insertion loss Max. 0.15 dB high conductivity metal conductor (Ag), and gold (Au) plating
- Surface mount type
- RoHS compliance (Pb-Free)

2. APPLICATIONS

- Applications using GSM, UMTS, and LTE
- RF amplifiers
- Communications equipment

3. GENERAL DESCRIPTIONS

CMX25Q25 is a 25dB, Directional coupler with high-power capacity and stable performance operating temperatures. LTCC (Low Temperature Co-fired Ceramic), high conductivity metal conductor (Ag), and gold (Au) plating enable the CMX25Q25 to minimize insertion loss and improve durability for thermal stabilization and electricity.

CMX25Q25 is best application for GSM, UMTS, LTE and communications equipment, which require low insertion loss and high power performance.

CMX25Q25 supports up to average 200 watts. It is a SMD type product enabling Pb-Free solder and meets RoHS-6.

4. ELECTRICAL SPECIFICATIONS

Frequency (MHz)	Coupling (dB)	Insertion Loss Max.(dB)	Frequency sensitivity (dB)
2300 – 2700	25.0 ± 1.0	0.15	Max ± 2.0
Return Loss Min.(dB)	**Directivity Min.(dB)**	**Power Capacity Avg.(W)**	**Operating Temperature(℃)**
20	20	200	-55 ~ 125

NOTE: These electrical specifications are measured by using a RN2 Technologies test board.
Specifications subject to change without notice.
For reliability test data, please contact RN2 Technologies sales team.

The information of this document is the exclusive property of RN2 Technologies and shall be kept confidential. Do not disclose, reproduce, or distribute this information without prior written permission of RN2 Technologies.

5. PORT CONFIGURATIONS

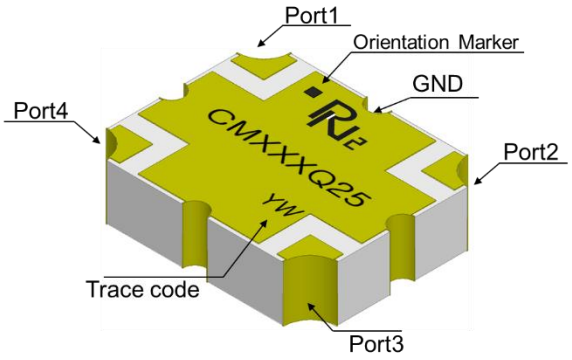

Figure 1. Top View

CMX25Q25 port configurations depending on how input signals are split. The Case 1 and Case 2 configurations mean that one input signal is split into two output signals. When port 1 is defined, the other ports are defined automatically.

Table 1. CMX25Q25 Port Configurations

Configuration	Port 1	Port 2	Port 3	Port 4
Case 1.	Input	Output	Isolated	Coupling
Case 2.	Output	Input	Coupling	Isolated

6. OUT DIMENSION

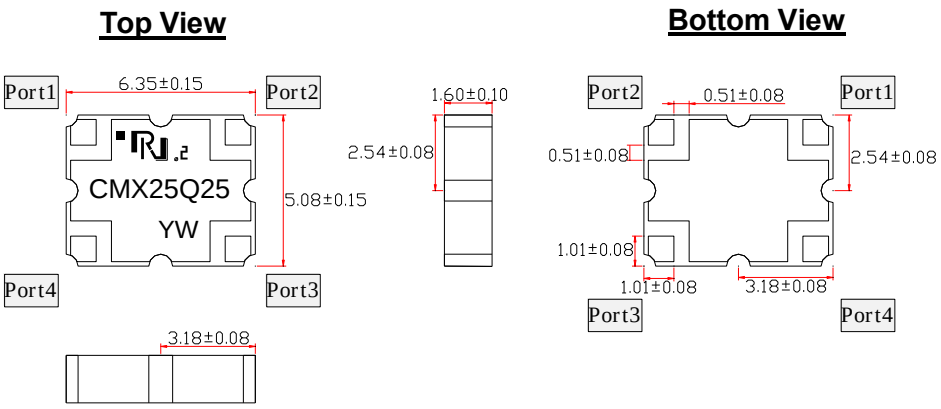

- Unit: mm
- Weight: 0.14 grams
- Camber specifications: Less than 0.08 mm

RN.2 Technologies

The information in this document is the exclusive property of RN2 Technologies and shall be kept confidential. Do not disclose, reproduce, or distribute this information without prior written permission of RN2 Technologies.

7. POWER DERATING CURVE

The maximum allowable average power (Maximum input power, CW) of the CMX25Q25 depending on base PCB temperature changes. The maximum allowable average power of the CMX25Q25 is limited by the following power derating curve.

The CMX25Q25 factors that determine the power derating curve are as follows:

- Internal circuit
- Thickness
- Thermal conductivity of materials
- Insertion loss
- Operating temperature
- Mounting interface temperature between the CMX25Q25 and the base PCB

The maximum operating temperature of the CMX25Q25 is 125 ºC. Therefore, when the base PCB temperature is over 125 ºC, the CMX25Q25 operates stably by decreasing its durable average input power. When the base PCB temperature reaches 200 ºC, the maximum allowable average power decreases to 0 watt.

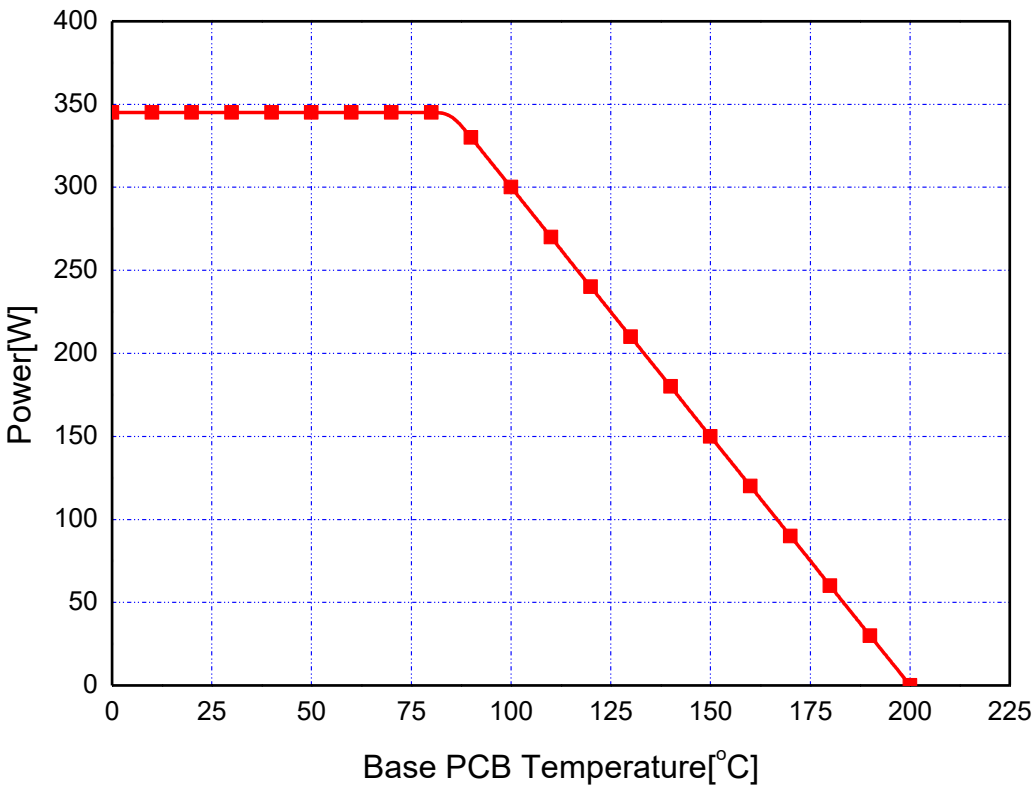

Figure 2. Power Derating Curve

RN.2 Technologies

The information in this document is the exclusive property of RN2 Technologies and shall be kept confidential. Do not disclose, reproduce, or distribute this information without prior written permission of RN2 Technologies.

8. RF Characteristics: Return Loss (at -55 ºC, 25 ºC, and 125 ºC)

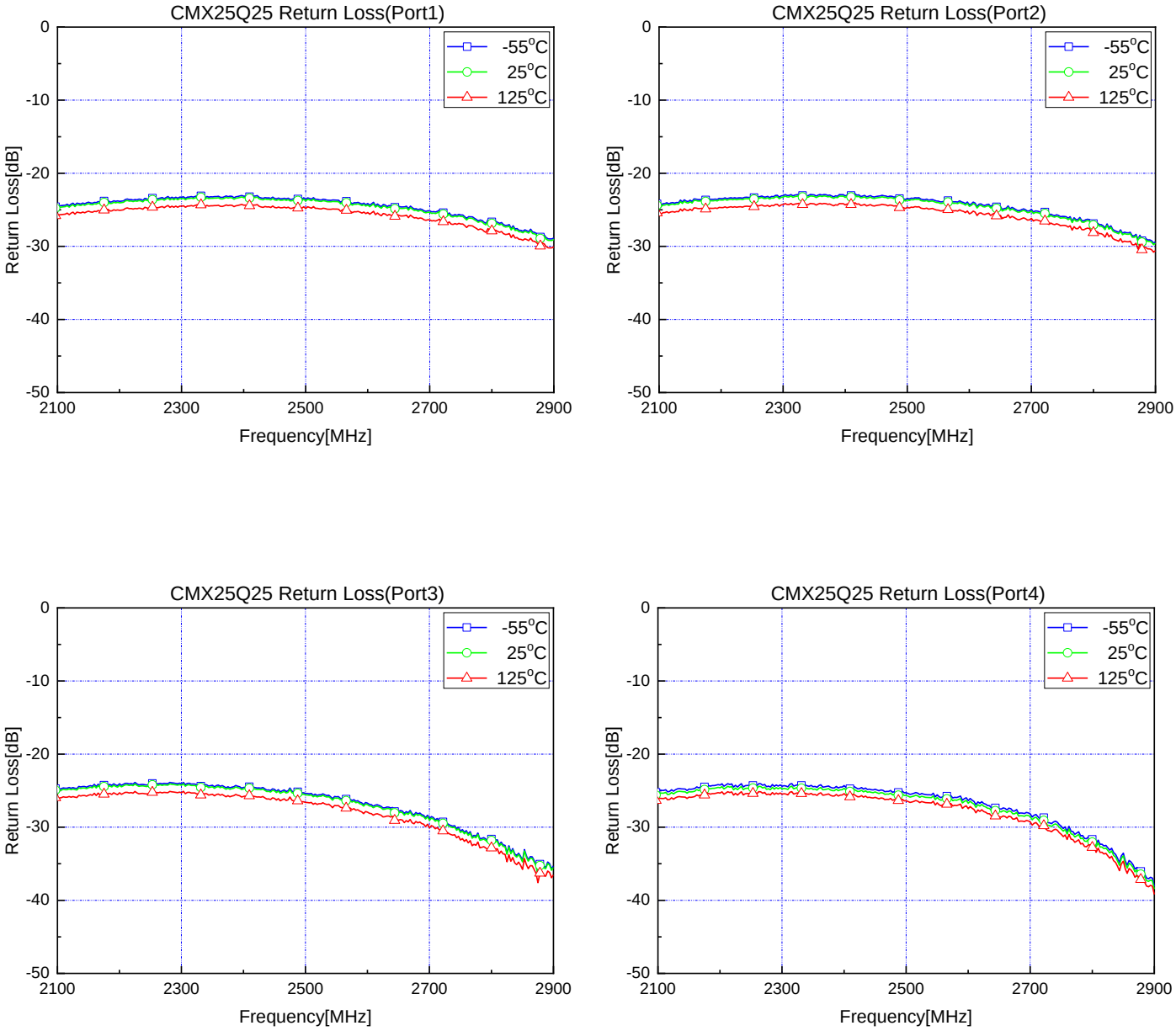

Figure 3. Test Plots of Return Loss (at -55 ºC, 25 ºC, and 125 ºC)

RN.2 Technologies

The information in this document is the exclusive property of RN2 Technologies and shall be kept confidential. Do not disclose, reproduce, or distribute this information without prior written permission of RN2 Technologies.

9. RF Characteristics: Coupling and Transmission, Directivity, and Insertion Loss (at -55 ºC, 25 ºC, and 125 ºC)

These test plots result from the Case 1 configuration in *'Table 1. CMX25Q25 Port Configurations'*. See *'PORT CONFIGURATIONS'* for more details.

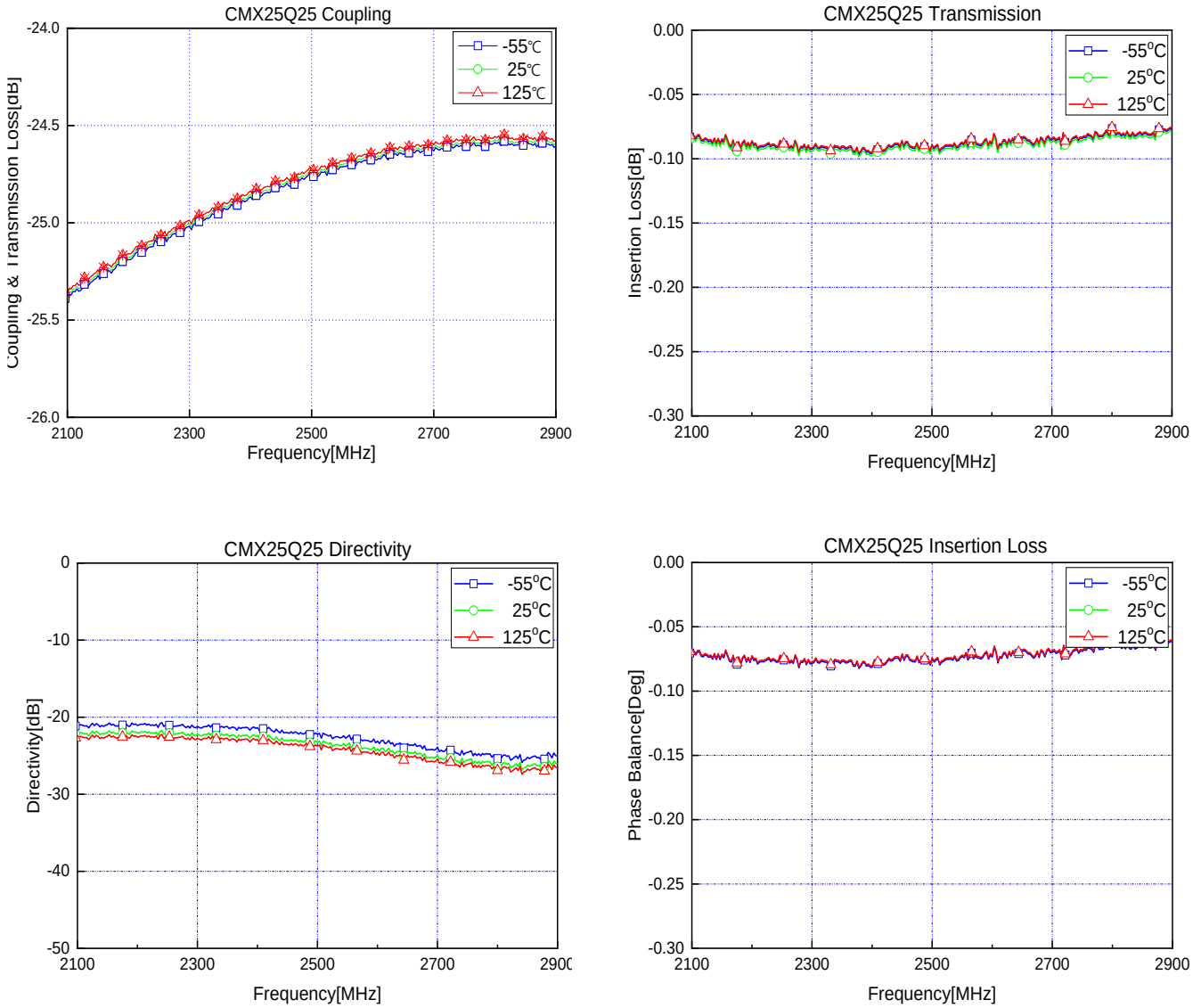

Figure 4. Test Plots of Coupling and Transmission Loss, Directivity, and Insertion Loss (at -55 ºC, 25 ºC, and 125 ºC)

RN.2 Technologies

The information in this document is the exclusive property of RN2 Technologies and shall be kept confidential. Do not disclose, reproduce, or distribute this information without prior written permission of RN2 Technologies.

10. RF TEST METHODS

To ensure S-Parameters reliability, we follow our internal test procedures by using the RN2 Technologies bare test board, RN2 Technologies test board, and test fixture connected with VNA (Vector Network Analyzer). In addition, we use the Automatic Port Extensions (APE) function of the Vector network analyzer to obtain accurate S-Parameters.

10.1 RF TEST PROCEDURES

To test the CMX25Q25 RF performance, we perform the following steps:

1. Preparing the Test Equipment
2. Performing the APE Function of the VNA
3. Measuring the S-parameters (Coupling, Transmission Loss, Isolation, and Return Loss)
4. Obtaining the Characteristic Parameters (Coupling, Isolation, Insertion Loss, Return Loss, and Directivity)

STEP 1: Preparing the Test Equipment

The following test equipment is prepared to test the CMX25Q25 RF performance.

- RN2 Technologies bare test board
- RN2 Technologies test board
- Vector network analyzer
- Test fixture

NOTE: See *'RN2 Technologies TEST BOARD LAYOUT'* for the RN2 Technologies test board details.

STEP 2: Performing the Automatic Port Extensions (APE) Function of the Vector Network Analyzer

The APE function is used with the RN2 Technologies bare test board to correctly check the CMX25Q25 RF performance. This reduces or eliminates both electrical delay and insertion loss of the test fixture.

The detailed steps are as follows:

1. Place the RN2 Technologies bare test board on the test fixture.
2. Click the **Cal** button of the VNA to calibrate it.
3. Connect the four ports of the test fixture into the four ports of the VNA.
4. Click the **Port Extensions** button of the VNA to measure the data of the RN2 Technologies bare test board.

NOTE: See *'AUTOMATIC PORT EXTENSIONS FUNCTION'* for more details.

The information in this document is the exclusive property of RN2 Technologies and shall be kept confidential. Do not disclose, reproduce, or distribute this information without prior written permission of RN2 Technologies.

STEP 3: Measuring the S-Parameters (Coupling, Transmission Loss, Isolation, and Return Loss)

After performing the APE function, the CMX25Q25 S-Parameters are measured through the following steps:

1. Place the RN2 Technologies test board on the test fixture.
2. Apply pressure to the test fixture using a pneumatic piston.
3. Connect the four ports of the test fixture into the four ports of the Vector network analyzer.
4. Set port1 as Case 1 configuration in *'Table 1. CMX25Q25 Port Configurations'*.
5. Calibrate the Vector network analyzer.
6. Measure the coupling value from port 1 to port 4 (S41).
7. Measure the transmission loss value from port 1 to port 2 (S21).
8. Measure the isolation value from port 1 to port 3 (S31).
9. Measure the return loss value from port 1 to port 1, port 2 to port 2, port 3 to port 3, and port 4 to port 4 respectively (S11, S22, S33, and S44).

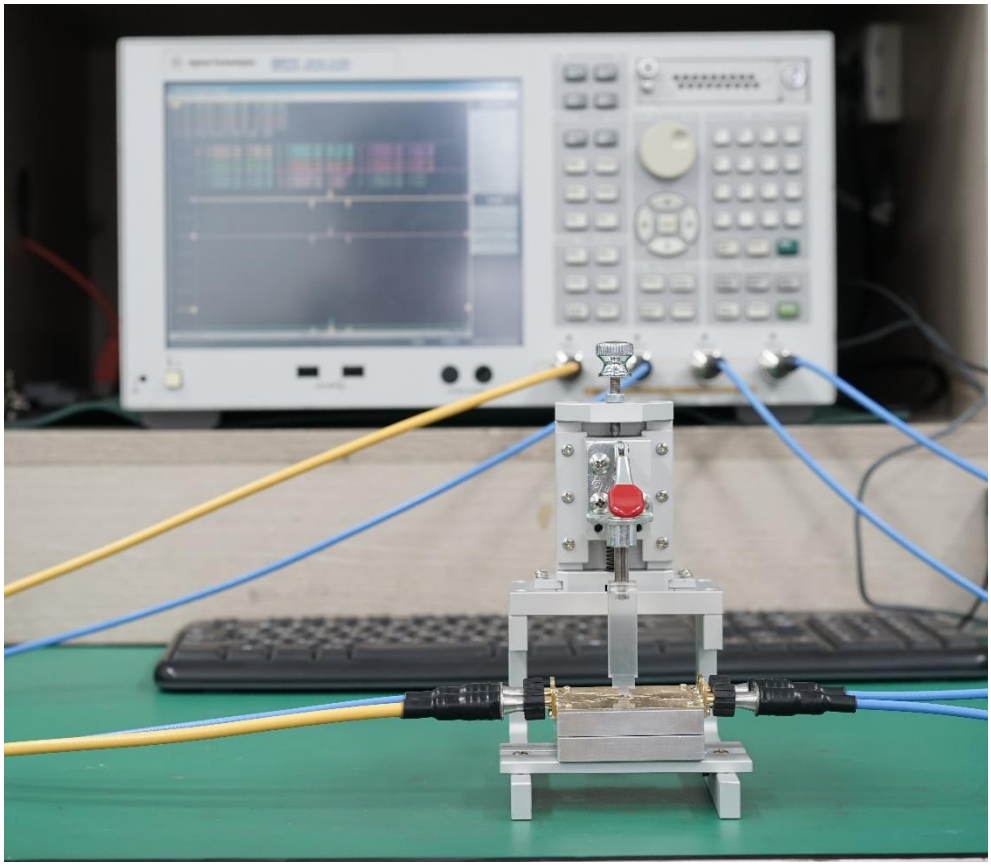

Figure 5. Test Setting to Measure the CMX25Q25 S-Parameters

The information in this document is the exclusive property of RN2 Technologies and shall be kept confidential. Do not disclose, reproduce, or distribute this information without prior written permission of RN2 Technologies.

STEP 4: Obtaining the Characteristic Parameters (Coupling, Isolation, Insertion Loss, Return Loss, and Directivity)

The s-parameters are calculated by using the formula in ***Table 2*** to obtain the characteristic parameters, such as coupling, isolation, insertion loss, return loss, and directivity

Table 2. Mathematical Formula for the CMX25Q25 Parameters

Parameter	S-Parameter	Power Method
Coupling	S41	$10 \cdot \log\left(\frac{P_{cou}}{P_{in}}\right)$
Transmission Loss	S21	$10 \cdot \log\left(\frac{P_{out}}{P_{in}}\right)$
Isolation	S31	$10 \cdot \log\left(\frac{P_{iso}}{P_{in}}\right)$
Insertion Loss	-	$10 \cdot \log\left(\frac{P_{in}}{P_{cou} + P_{out}}\right)$
Return Loss	S11 S22 S33 S44	$10 \cdot \log\left(\frac{P_{in}}{P_{back}}\right)$
Directivity (dB)	S31-S41	$10 \cdot \log\left(\frac{P_{cou}}{P_{iso}}\right)$

NOTE

- P_{in} : Power of Input Port
- P_{out} : Power of Output Port
- P_{cou} : Power of Coupling Port
- P_{iso} : Power of Isolated Port
- P_{back} : Return Power of Input Port

RN.2 Technologies

The information in this document is the exclusive property of RN2 Technologies and shall be kept confidential. Do not disclose, reproduce, or distribute this information without prior written permission of RN2 Technologies.

10.2 RN2 Technologies TEST BOARD LAYOUT

Figure 6 shows the RN2 Technologies test board layout used for testing the CMX25Q25 RF performance. The RN2 Technologies test board is based on the Taconic RF35 board with the dielectric constant of 3.5, board thickness of 0.8 mm, and copper of 1 Oz.

We recommend that you use the same material and design layout, as shown in ***Figure 6***, to meet the specifications in this datasheet. However, if you use different materials, you must follow the basic guidelines. See *'RECOMMENDED PCB LAYOUT AND SOLDER MASK PATTERN'* for more details.

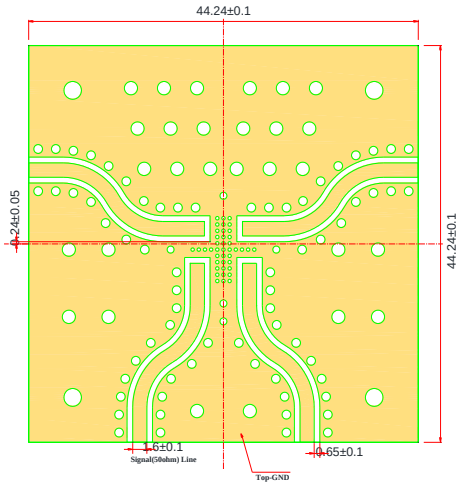

Figure 6. RN2 Technologies Test Board Layout

10.3 AUTOMATIC PORT EXTENSIONS (APE) FUNCTION

To accurately measure the CMX25Q25 S-Parameters, we use the Automatic Port Extensions (APE) function of the VNA. The APE function is used for reducing or eliminating both electrical delay and insertion loss of test fixtures. It provides a convenient, automated way to calculate the insertion loss and electrical delay terms by a simple measurement of an open or short circuit, which is easy to do in test fixtures.

We consider the transmission lines of the RN2 Technologies bare test board as extensions of the coaxial test cables that are between the Vector network analyzer and the CMX25Q25. With the APE function, we extend the coaxial test ports so that our calibration plane is right at the terminals of the CMX25Q25, and not at the connectors of the RN2 Technologies bare test board.

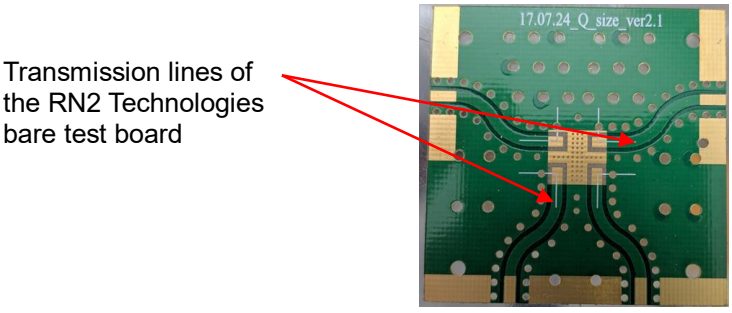

Figure 7. Performing the APE Function Test

RN2 Technologies

The information in this document is the exclusive property of RN2 Technologies and shall be kept confidential. Do not disclose, reproduce, or distribute this information without prior written permission of RN2 Technologies.

11. RECOMMENDED PCB LAND PATTERN

Figure 8 shows the recommended PCB layout and solder mask pattern to meet the specifications in this datasheet. When you use different materials other than the RN2 Technologies test board, you must follow the basic guidelines and calculate the 50 ohm impedance line width using a different PCB stack information.

Basic Guidelines

- Place GND more than 30% of the CMX25Q25 GND dimension regardless of a via size.
- Appropriately increase via sizes and numbers to allow low impedance ground connection and good thermal conductivity.
- Align the CMX25Q25 ground plane with the solder to have good connection to ground.
- Fill the via holes under the CMX25Q25 with the solder for thermal emission.

NOTE: Contact the RN2 Technologies sales team for more detailed PCB layout and solder mask pattern information.

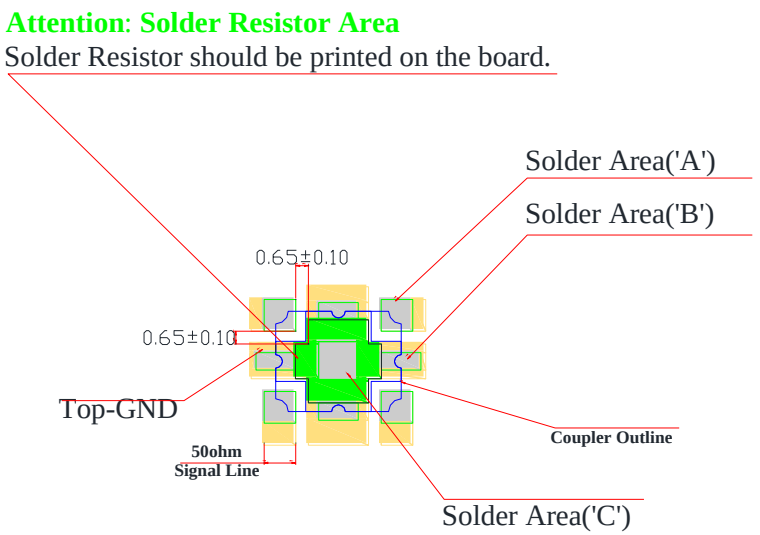

NOTE

- Test Solder Cream: SAC-305 (Alpha Metal)
- Pb-Free Solder Alloy: Sn/Ag/Cu Ratio of 96.5/3.0/0.5
- Solder Area ('A') Dimension : 1.60 mm by 1.60 mm
- Solder Area ('B') Dimension : 2.00 mm by 0.88 mm
- Solder Area ('C') Dimension : 2.00 mm by 2.00 mm

Figure 8. Recommended PCB Layout and Solder Mask Pattern

The information in this document is the exclusive property of RN2 Technologies and shall be kept confidential. Do not disclose, reproduce, or distribute this information without prior written permission of RN2 Technologies.

12. SOLDERING PROCESS

The CMX25Q25 soldering steps are as follows:

1. Cleaning the PCB
2. Applying solder paste to the PCB
3. Placing the CMX25Q25 on the PCB
4. Reflowing the CMX25Q25 to the PCB
5. Cleaning and inspecting the soldered PCB with the CMX25Q25

STEP 1: Cleaning the PCB
Carefully clean the PCB surface where the CMX25Q25 is soldered.
Particles must not be placed on the PCB surface where the CMX25Q25 is soldered.

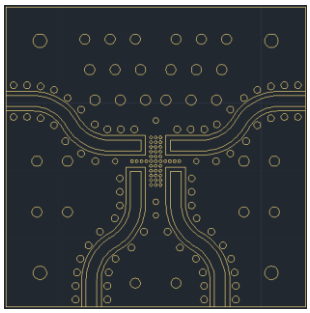

Figure 9. Cleaning the PCB Surface Where the CMX25Q25 is Soldered

STEP 2: Applying the Solder Paste to the PCB
Apply the solder paste to the 9 points on the PCB surface.
It enables good thermal conductivity because the CMX25Q25 is firmly attached to the PCB surface without air.

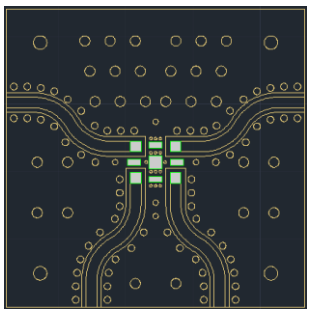

Figure 10. Applying the Solder Paste to the 9 Points on the PCB Surface

RN.2 Technologies

The information in this document is the exclusive property of RN2 Technologies and shall be kept confidential. Do not disclose, reproduce, or distribute this information without prior written permission of RN2 Technologies.

STEP 3: Placing the CMX25Q25 on the PCB
Correctly place the CMX25Q25 on the 9 points of the PCB surface.
Applying the solder paste to the 9 points helps you firmly attach the CMX25Q25 to the PCB surface.

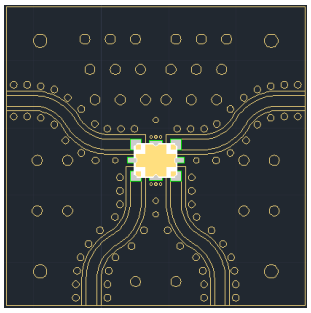

Figure 11. Placing the CMX25Q25 on the 9 Points of the PCB Surface

STEP 4: Reflowing the CMX25Q25 to the PCB
We recommend both manual soldering and PCB surface pre-heating methods when reflowing the CMX25Q25 to the PCB surface. Be careful NOT to touch the iron tip to the CMX25Q25 when you use the manual soldering method.
See *'REFLOW PROFILE'* for more details.

13. REFLOW PROFILE

Figure 12 shows the thermal reflow profile of the SAC-305 (Alpha metal), which is a test solder cream we used.

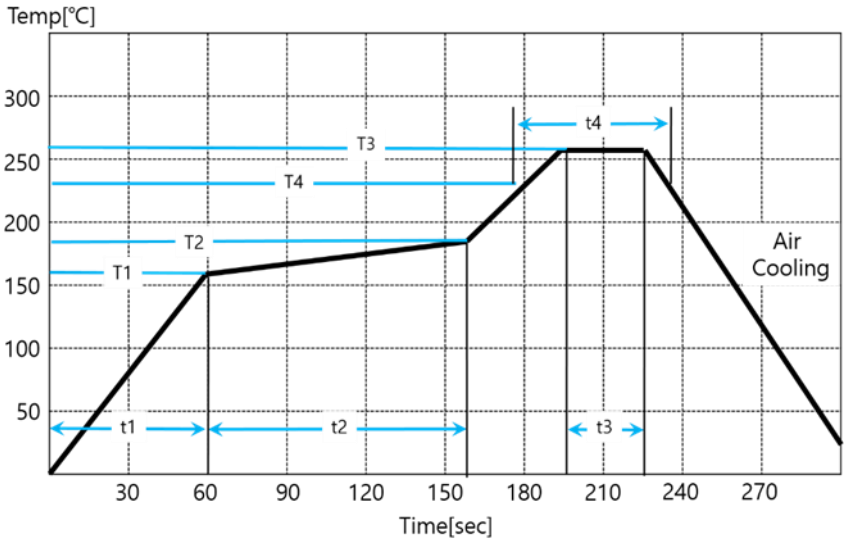

Figure 12. Thermal Reflow Profile

	Ramp Up	Pre-Heating	Peak	Soaking
Temperature(℃)	T1:160±5	T2:180±5	T3:260±5	T4:230±5
Time(sec)	t1:60±5	t2:100±15	t3:30±5	t4:60±10

RN.2 Technologies
The information in this document is the exclusive property of RN2 Technologies and shall be kept confidential. Do not disclose, reproduce, or distribute this information without prior written permission of RN2 Technologies.

14. PACKAGING AND ORDERING INFORMATION

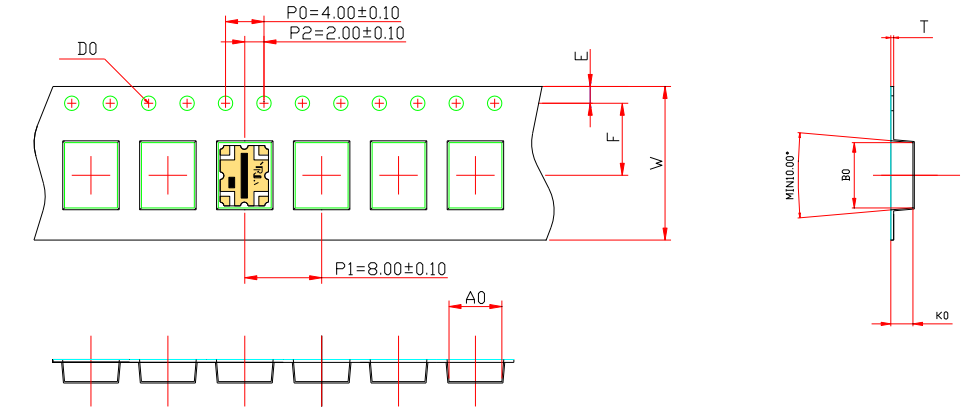

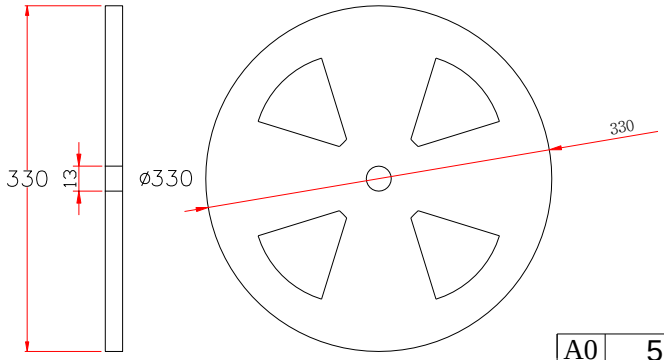

A0	5.50±0.10	E	1.75±0.10
B0	6.80±0.10	F	7.50±0.10
D0	1.50+0.10	T	0.30±0.05
K0	1.87±0.10	W	16.00±0.30

Standard Packaging Quantity : 4,000 PCS / Reel

RN.2 Technologies

The information in this document is the exclusive property of RN2 Technologies and shall be kept confidential. Do not disclose, reproduce, or distribute this information without prior written permission of RN2 Technologies.

15. HANDLING GUIDE

PLEASE READ THIS NOTICE BEFORE USING OUR LTCC COUPLERS.

I. Be careful when transporting

- Ensure proper transportation as excessive stress or shock may damage LTCC couplers due to the nature of ceramics structure.
- LTCC couplers cracked or damaged on terminals may have their property changed.

II. Be careful during storage

- Store LTCC couplers less than temperature +30°C.
- Keep the humidity at 45 % to 75 % around LTCC couplers.
- Prevent corrosive gas (Cl_2, NH_3, SO_X, NO_X, etc.) from contacting LTCC couplers.
- It is recommended to use LTCC couplers within 6 months of receipt. If the period exceeds 6 months, solderability may need to be verified.

III. Be careful when soldering

- Solder all the ground terminals, IN and OUT pad of LTCC couplers on the ground plane of the PCB.
- LTCC couplers may be cracked or broken by uneven forces from a claw or suction device.
- Mechanical stress by any other devices may damage LTCC couplers when positioning them on PCB.
- Do not use dropped LTCC couplers.
- Ensure that any soldering is carried out by the condition of specification sheet.
- Do not re-use LTCC couplers which are de-soldered from PCB.

The information in this document is the exclusive property of RN2 Technologies and shall be kept confidential. Do not disclose, reproduce, or distribute this information without prior written permission of RN2 Technologies.

16. LEGAL INFORMATION

Information in this document is believed to be accurate and reliable. However, RN2 Technologies does not give any representations or warranties, expressed or implied, as to the accuracy or completeness of such information and shall have no liability for the consequences of use of such information. RN2 Technologies does not take any responsibility for the content in this document if provided by an information source outside of RN2 Technologies.

RN2 Technologies reserves the right to make changes to information published in this document, including without limitation specifications and product descriptions, at any time and without notice. This document supersedes and replaces all information supplied prior to the publication hereof.

RN2 Technologies products are not authorized for use in safety-critical applications (such as life support) where a failure of the RN2 Technologies products would reasonably be expected to cause severe personal injury or death, unless officers of the parties have executed an agreement specifically governing such use. Buyers represent that they have all necessary expertise in the safety and regulatory ramifications of their applications, and acknowledge and agree that they are solely responsible for all legal, regulatory and safety-related requirements concerning their products and any use of RN2 Technologies products in such safety-critical applications, notwithstanding any applications-related information or support that may be provided by RN2 Technologies. Further, Buyers must fully indemnify RN2 Technologies and its representatives against any damages arising out of the use of RN2 Technologies products in such safety-critical applications.

RN2 Technologies does not accept any liability related to any default, damage, costs or problem which is based on any weakness or default in the customer's applications or products. Customer is responsible for doing all necessary testing for the customer's applications or products using RN2 Technologies products in order to avoid a default of the applications and the products. RN2 Technologies does not accept any liability in this respect.

RN2 Technologies

HTTP://WWW.RN2.CO.KR

The information in this document is the exclusive property of RN2 Technologies and shall be kept confidential. Do not disclose, reproduce, or distribute this information without prior written permission of RN2 Technologies.