RN.2 Technologies

Datasheet

S0805A

Rev. 1.0

Copyright © 2021 RN2 Technologies Co., Ltd. All Rights Reserved.

The information of this document is the exclusive property of RN2 Technologies and shall be kept confidential. Do not disclose, reproduce, or distribute this information without prior written permission of RN2 Technologies.

Contents

1. KEY FEATURES **3**
2. APPLICATIONS **3**
3. GENERAL DESCRIPTIONS **3**
4. ELECTRICAL SPECIFICATIONS **3**
5. PORT CONFIGURATIONS **4**
6. OUT DIMENSION **4**
7. POWER DERATING CURVE **5**
8. RF Characteristics (at -55 ºC, 25 ºC and 150 ºC) **6**
9. RF TEST METHODS **7**
9.1. RF TEST PROCEDURES 7
9.2. RN2 TEST BOARD LAYOUT 9
9.3. AUTOMATIC PORT EXTENSIONS (APE) FUNCTION 9
10. RECOMMENDED PCB LAYOUT **10**
11. SOLDERING PROCESS **11**
12. REFLOW PROFILE **12**
13. PACKAGING AND ORDERING INFORMATION **13**
14. HANDLING GUIDE **14**
15. LEGAL INFORMATION **15**

3W, Termination
with High-Power Capacity and Stable Performance based on RN2 Resistor Technology
Model Name: S0805A

1. KEY FEATURES

- Frequency range DC ~ 6000 MHz
- Excellent high-power capacity up to average 3 watts
- Excellent stable performance at different temperatures
- Small size (2.00 x 1.25 mm) SMD package
- RoHS compliance (Pb-Free)

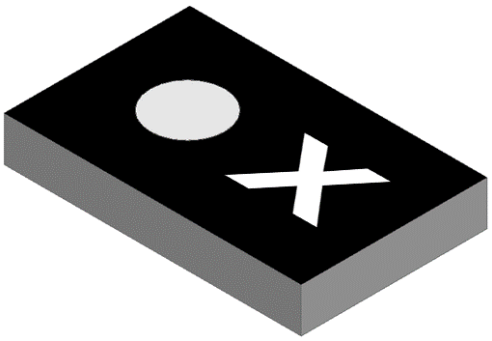

2. APPLICATIONS

- Applications using mobile networks, broadcast
- High power amplifiers
- Isolator, Circulator
- Military

3. GENERAL DESCRIPTIONS

S0805A is a 3W termination with high-power capacity and stable performance in different temperatures. The Al_2O_3, high conductivity metal conductor (Ag), and gold (Au) plating enable S0805A to low return loss and improve durability for thermal stabilization and electricity.

S0805A is suited for applications using GSM, UMTS, LTE and 5G communications equipment, requiring high power.

S0805A supports up to average 3 watts. It is a SMD type product enabling Pb-Free solder and meets RoHS-6.

4. ELECTRICAL SPECIFICATIONS

Frequency (MHz)	Resistance Value (Ω)	Return Loss(S11) (dB, Min.)	Power Capacity Avg.(Watt)	Operating Temperature(℃)
DC ~ 6000	50 ± 2%	18	3	-55 ~ 150

NOTE: These electrical specifications are measured by using a RN2 Technologies test board.
Specifications subject to change without notice.
For reliability test data, please contact RN2 Technologies sales team.

5. PORT CONFIGURATIONS

Figure 1 shows the locations of the S0805A ports. The orientation marker is included to represent input port.

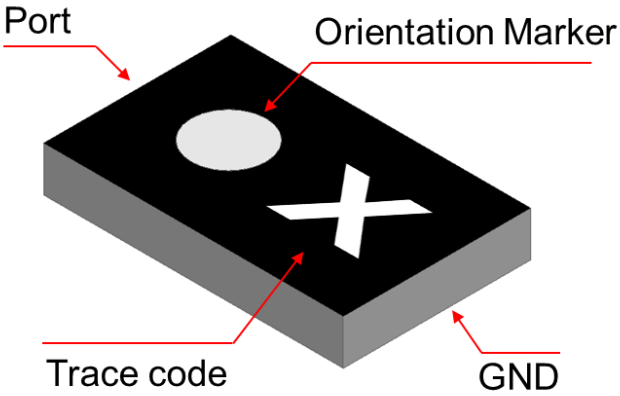

Figure 1. S0805A (Top View)

6. OUT DIMENSION

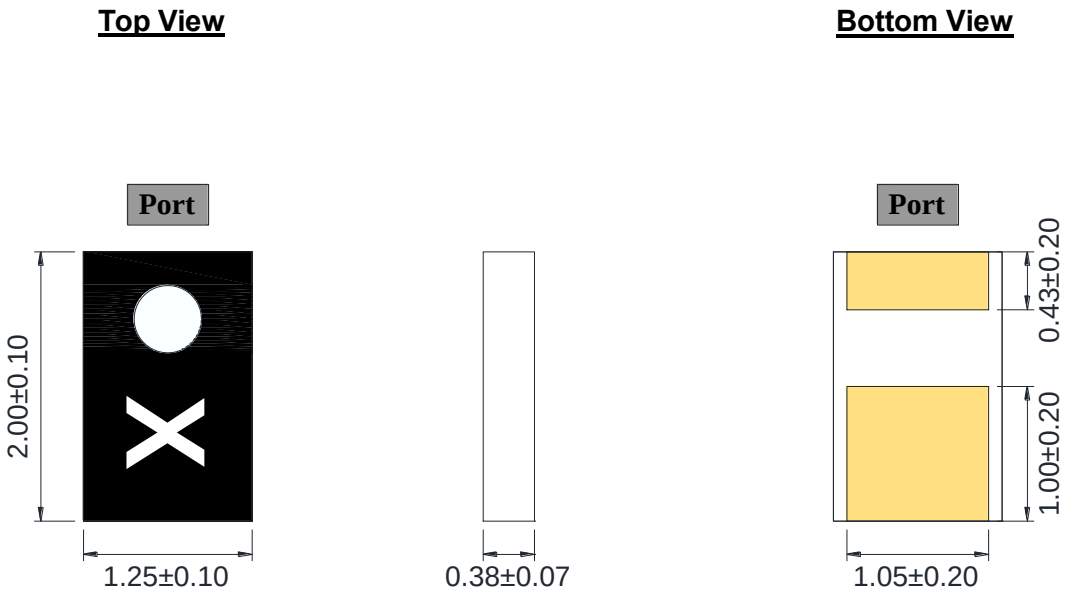

- Unit: mm
- Weight: 0.004 grams
- Camber specifications: Less than 0.08 mm

7. POWER DERATING CURVE

The maximum allowable average power (Maximum input power, CW) of the S0805A depending on base PCB temperature changes. The maximum allowable average power of the S0805A is limited by the following power derating curve.

The S0805A factors that determine the power derating curve are as follows:

- Internal circuit
- Thickness
- Thermal conductivity of materials
- Operating temperature
- Mounting interface temperature between the S0805A and the base PCB

The maximum operating temperature of the S0805A is 150 ºC. Therefore, when the base PCB temperature is over 100 ºC, the S0805A operates stably by decreasing its durable average input power. When the base PCB temperature reaches 150 ºC, the maximum allowable average power decreases to 0 watt.

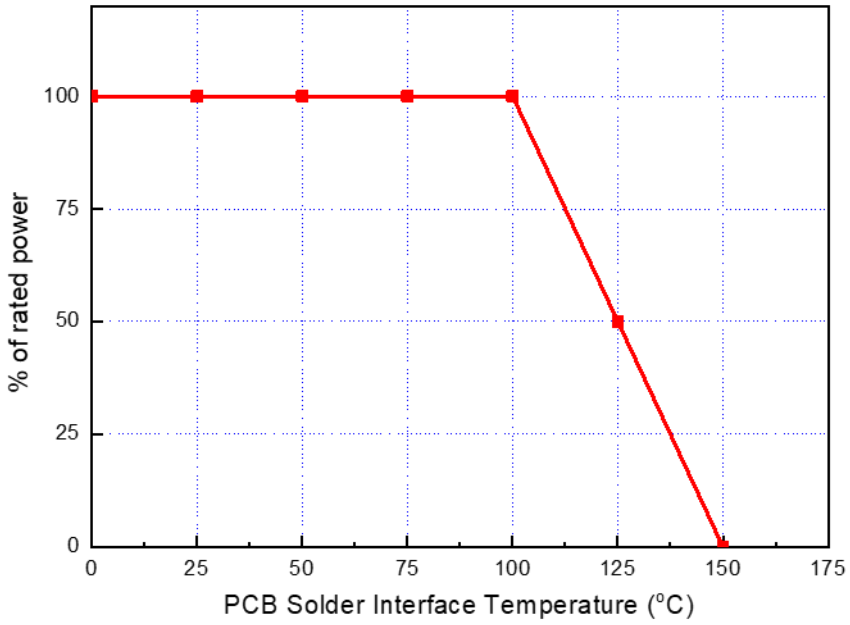

Figure 2. Power Derating Curve

8. RF Characteristics (at -55 ºC, 25 ºC and 150 ºC)

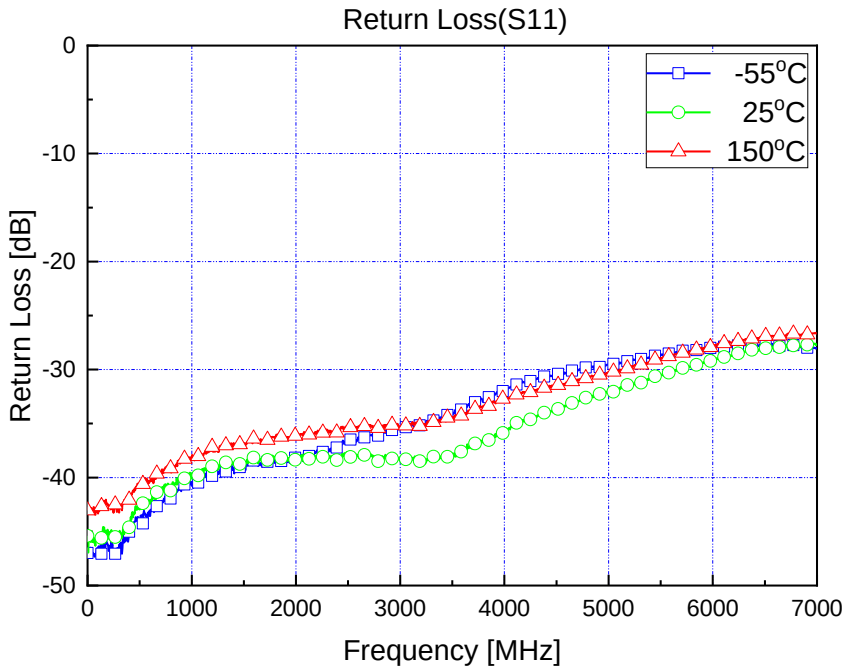

Figure 3. Test Plots of Return Loss (at -55 ºC, 25 ºC and 150 ºC)

9. RF TEST METHODS

To ensure S-Parameters reliability, we follow our internal test procedures by using the RN2 Technologies bare test board, RN2 Technologies test board, and test fixture connected with VNA (Vector Network Analyzer). In addition, we use the Automatic Port Extensions (APE) function of the Vector network analyzer to obtain accurate s-parameters.

9.1. RF TEST PROCEDURES

To test the S0805A RF performance, we perform the following steps:

1. Preparing the Test Equipment
2. Performing the APE Function of the VNA
3. Measuring the S-Parameters (Return Loss)
4. Obtaining the Characteristic Parameters (Return Loss)

STEP 1: Preparing the Test Equipment

The following test equipment is prepared to test the S0805A RF performance.

- RN2 Technologies bare test board
- RN2 Technologies test board
- Vector network analyzer
- Test fixture

NOTE: See *'RN2 Technologies TEST BOARD LAYOUT'* for the RN2 Technologies test board details.

STEP 2: Performing the Automatic Port Extensions (APE) Function of the Vector Network Analyzer

The APE function is used with the RN2 Technologies bare test board to correctly check the S0805A RF performance. This reduces or eliminates both electrical delay and insertion loss of the test fixture.

The detailed steps are as follows:

1. Place the RN2 Technologies bare test board on the test fixture.
2. Click the **Cal** button of the Vector network analyzer to calibrate it.
3. Connect the port of the test fixture into the port of the Vector network analyzer.
4. Click the **Port Extensions** button of the Vector network analyzer to measure the data of the RN2 Technologies bare test board.

NOTE: See *'AUTOMATIC PORT EXTENSIONS FUNCTION'* for more details.

STEP 3: Measuring the S-parameters (Return Loss)

After performing the APE function, the S0805A s-parameters are measured through the following steps:

1. Place the RN2 test board on the test fixture.
2. Apply pressure to the test fixture using a pneumatic piston.
3. Connect the port of the test fixture into the port of the Vector network analyzer.
4. Calibrate the Vector network analyzer.
5. Measure the return loss value from port 1 to port 1 (S11).

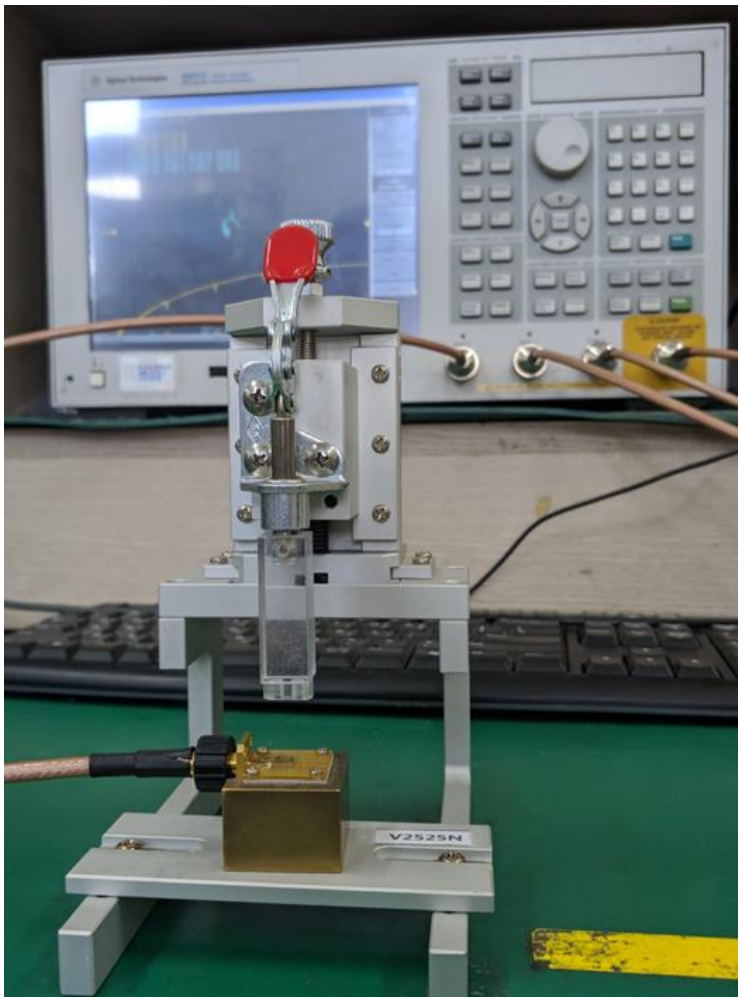

Figure 4. Test Setting to Measure the S0805A S-parameters

9.2. RN2 TEST BOARD LAYOUT

Figure 5 shows the RN2 Technologies test board layout used for testing the S0805A RF performance. The RN2 Technologies test board is based on the Taconic RF35 board with the dielectric constant of 3.5, board thickness of 0.8 mm, and copper of 1 Oz.

We recommend that you use the same material and design layout, as shown in ***Figure 5***, to meet the specifications in this datasheet. However, if you use different materials, you must follow the basic guidelines.

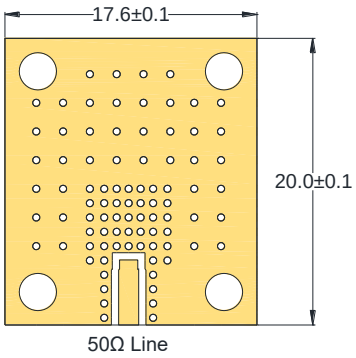

Figure 5. RN2 Technologies Test Board Layout

9.3. AUTOMATIC PORT EXTENSIONS (APE) FUNCTION

To accurately measure the S0805A s-parameters, we use the Automatic Port Extensions (APE) function of the Vector network analyzer. The APE function is used for reducing or eliminating both electrical delay and insertion loss of test fixtures. It provides a convenient, automated way to calculate the insertion loss and electrical delay terms by a simple measurement of an open or short circuit, which is easy to do in test fixtures.

We consider the transmission lines of the RN2 Technologies bare test board as extensions of the coaxial test cables that are between the Vector network analyzer and the S0805A. With the APE function, we extend the coaxial test ports so that our calibration plane is right at the terminals of the S0805A, and not at the connectors of the RN2 Technologies bare test board.

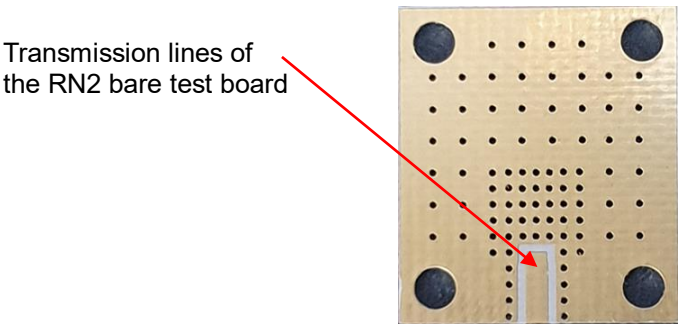

Figure 6. Performing the APE Function Test

10. RECOMMENDED PCB LAYOUT

Figure 7 shows the recommended PCB layout to meet the specifications in this datasheet. When you use different materials other than the RN2 Technologies test board, you must follow the basic guidelines and calculate the 50ohm impedance line width using a different PCB stack information.

Basic Guidelines

- Place GND more than 30% of the S0805A GND dimension regardless of a via size.
- Appropriately increase via sizes and numbers to allow low impedance ground connection and good thermal conductivity.
- Align the S0805A ground plane with the solder to have good connection to ground.
- Fill the via holes under the S0805A with the solder for thermal emission.

NOTE: Contact the RN2 Technologies sales team for more detailed PCB layout.

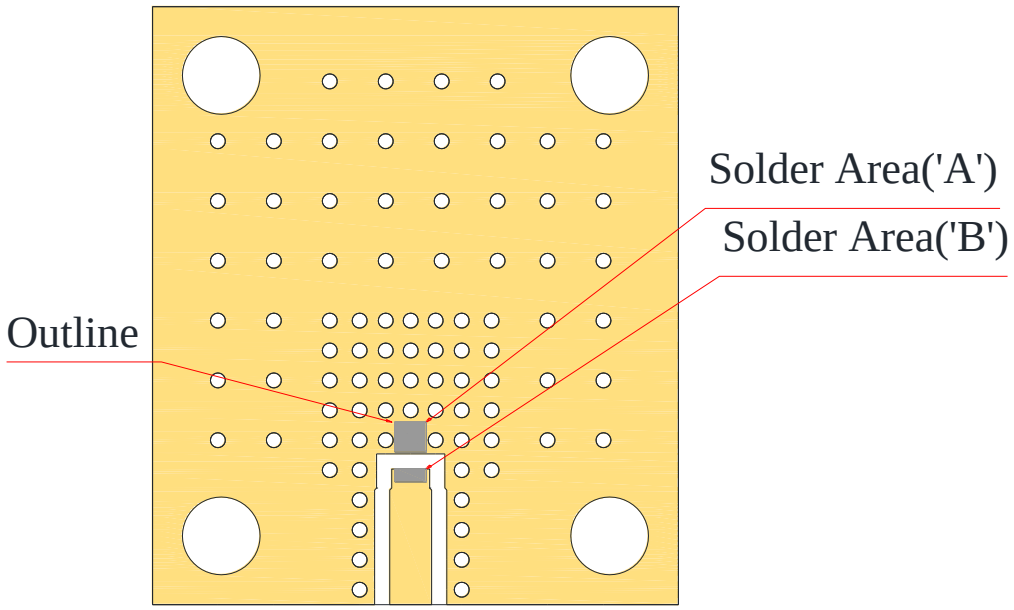

NOTE

- Test Solder Cream: SAC-305 (Alpha Metal)
- Lead-Free Solder Alloy: Sn/Ag/Cu Ratio of 96.5/3.0/0.5
- Solder Area (‘A’) Dimension: 1.05 mm by 1.00 mm
- Solder Area (‘B’) Dimension: 1.05mm by 0.43mm

Figure 7. Recommended PCB Layout

11. SOLDERING PROCESS

The S0805A soldering steps are as follows:

1. Cleaning the PCB
2. Applying solder paste to the PCB
3. Placing the S0805A on the PCB
4. Reflowing the S0805A to the PCB
5. Cleaning and inspecting the soldered PCB with the S0805A

STEP 1: Cleaning the PCB
Carefully clean the PCB surface where the S0805A is soldered.
Particles must not be placed on the PCB surface where the S0805A is soldered.

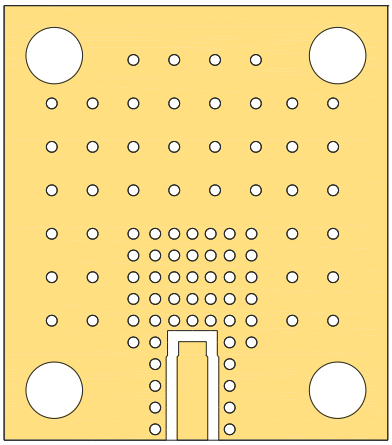

Figure 8. Cleaning the PCB Surface Where the S0805A is soldered

STEP 2: Applying the Solder Paste to the PCB
Apply the solder paste to the 2 points on the PCB surface.
It enables good thermal conductivity because the S0805A is firmly attached to the PCB surface without air.

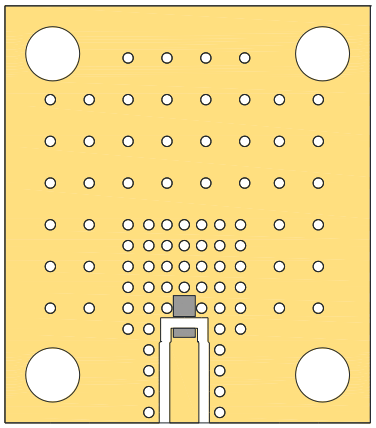

Figure 9. Applying the Solder Paste to the 2 Points on the PCB Surface

STEP 3: Placing the S0805A on the PCB

Correctly place the S0805A on the 2 points of the PCB surface.
Applying the solder paste to the 2 points helps you firmly attach the S0805A to the PCB surface.

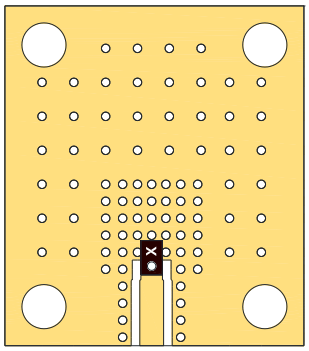

Figure 10. Placing the S0805A on the 2 Points of the PCB Surface

STEP 4: Reflowing the S0805A to the PCB
We recommend both manual soldering and PCB surface pre-heating methods when reflowing the S0805A to the PCB surface. Be careful NOT to touch the iron tip to the S0805A when you use the manual soldering method.
See *'REFLOW PROFILE'* for more details.

12. REFLOW PROFILE

Figure 11 shows the thermal reflow profile of the SAC-305 (Alpha metal), which is a test solder cream we used.

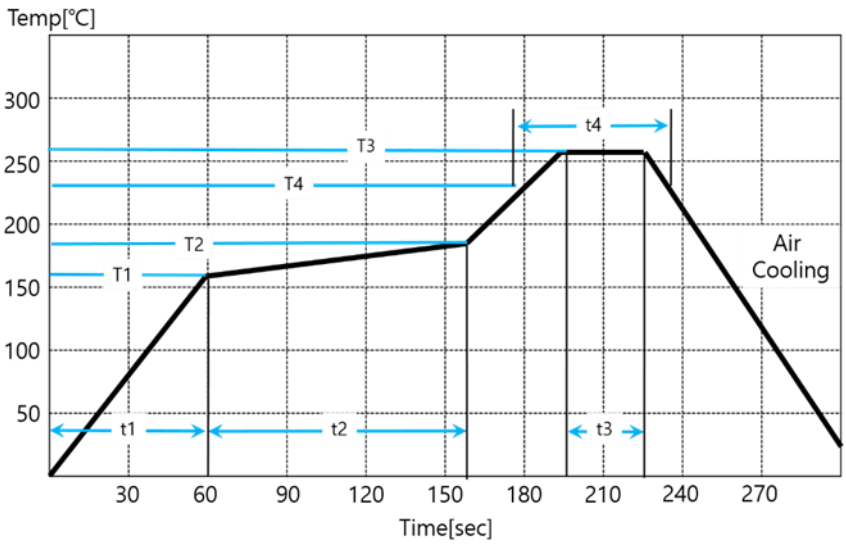

Figure 11. Thermal Reflow Profile

	Ramp Up	Pre-Heating	Peak	Soaking
Temperature(℃)	T1:160±5	T2:180±5	T3:260±5	T4:230±5
Time(sec)	t1:60±5	t2:100±15	t3:30±5	t4:60±10

13. PACKAGING AND ORDERING INFORMATION

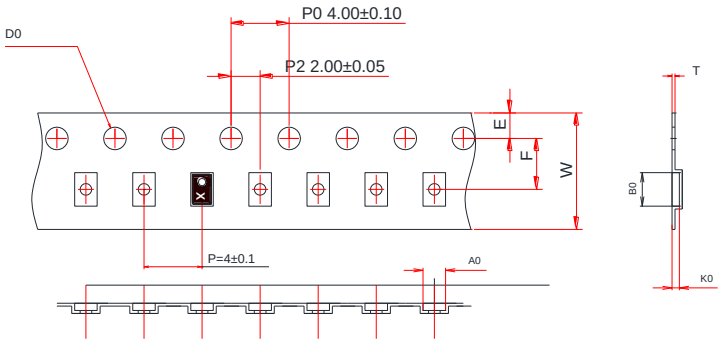

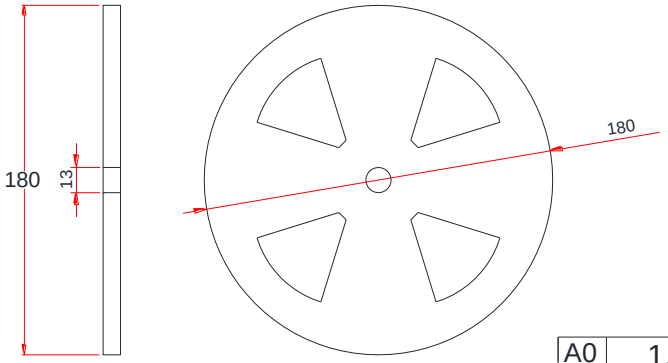

A0	1.55±0.05	E	1.75±0.10
B0	2.30±0.05	F	3.50±0.05
D0	1.55±0.05	T	0.20±0.05
K0	0.50±0.05	W	8.00±0.30

Standard Packaging Quantity : 5,000 PCS/Reel

14. HANDLING GUIDE

PLEASE READ THIS NOTICE BEFORE USING OUR TERMINATION.

I. Be careful when transporting

- Ensure proper transportation as excessive stress or shock may damage Termination due to the nature of ceramics structure.
- Terminations cracked or damaged on terminals may have their property changed.

II. Be careful during storage

- Store Termination in the temperature of 23 ± 5℃.
- Keep the humidity at 45% to 75% around Termination.
- Prevent corrosive gas (Cl_2, NH_3, SO_X, NO_X, etc.) from contacting Terminations.
- It is recommended to use Termination within 6 months of receipt. If the period exceeds 6 months, solderability may need to be verified.

III. Be careful when soldering

- Solder all the ground terminals, IN pad of Termination on the ground plane of the PCB.
- Termination may be cracked or broken by uneven forces from a claw or suction device.
- Mechanical stress by any other devices may damage Termination when positioning them on PCB.
- Do not use dropped Termination.
- Ensure that any soldering is carried out by the condition of specification sheet.
- Do not re-use Termination which are de-soldered from PCB.

15. LEGAL INFORMATION

Information in this document is believed to be accurate and reliable. However, RN2 Technologies does not give any representations or warranties, expressed or implied, as to the accuracy or completeness of such information and shall have no liability for the consequences of use of such information. RN2 Technologies does not take any responsibility for the content in this document if provided by an information source outside of RN2 Technologies.

RN2 Technologies reserves the right to make changes to information published in this document, including without limitation specifications and product descriptions, at any time and without notice. This document supersedes and replaces all information supplied prior to the publication hereof.

RN2 Technologies products are not authorized for use in safety-critical applications (such as life support) where a failure of the RN2 Technologies products would reasonably be expected to cause severe personal injury or death, unless officers of the parties have executed an agreement specifically governing such use. Buyers represent that they have all necessary expertise in the safety and regulatory ramifications of their applications, and acknowledge and agree that they are solely responsible for all legal, regulatory and safety-related requirements concerning their products and any use of RN2 Technologies products in such safety-critical applications, notwithstanding any applications-related information or support that may be provided by RN2 Technologies. Further, Buyers must fully indemnify RN2 Technologies and its representatives against any damages arising out of the use of RN2 Technologies products in such safety-critical applications.

RN2 Technologies does not accept any liability related to any default, damage, costs or problem which is based on any weakness or default in the customer’s applications or products. Customer is responsible for doing all necessary testing for the customer’s applications or products using RN2 Technologies products in order to avoid a default of the applications and the products. RN2 Technologies does not accept any liability in this respect.

RN2 Technologies

HTTP://WWW.RN2.CO.KR/